इंटरनेट मानक

Disclosure to Promote the Right To Information

Whereas the Parliament of India has set out to provide a practical regime of right to information for citizens to secure access to information under the control of public authorities, in order to promote transparency and accountability in the working of every public authority, and whereas the attached publication of the Bureau of Indian Standards is of particular interest to the public, particularly disadvantaged communities and those engaged in the pursuit of education and knowledge, the attached public safety standard is made available to promote the timely dissemination of this information in an accurate manner to the public.

"जानने का अधिकार, जीने का अधिकार"
Mazdoor Kisan Shakti Sangathan
"The Right to Information, The Right to Live"

"पुराने को छोड नये के तरफ"
Jawaharlal Nehru
"Step Out From the Old to the New"

IS 10994-5 (1985): Cartridges for Shot Guns, Part 5: Anvil
[PGD 28: Arms and Ammunition for Civilian Use]

"ज्ञान से एक नये भारत का निर्माण"
Satyanarayan Gangaram Pitroda
"Invent a New India Using Knowledge"

Act Number 22 of 2005
The Indian Parliament
RIGHT TO INFORMATION

Made Available By
Public.Resource.Org

"ज्ञान एक ऐसा खजाना है जो कभी चुराया नहीं जा सकता है"
Bhartṛhari—Nītiśatakam
"Knowledge is such a treasure which cannot be stolen"

BLANK PAGE

BRUTUM FULMEN

IGNORANTIA JURIS NON EXCUSAT

PROTECTED BY COPYRIGHT

Indian Standard (Reaffirmed 2005)

SPECIFICATION FOR CARTRIDGES FOR SHOT GUNS

PART 5 ANVIL

1. Scope — Covers the dimensional and material requirements of anvil for shot gun cartridges.

2. Dimensions — Shall be as shown in Fig. 1.

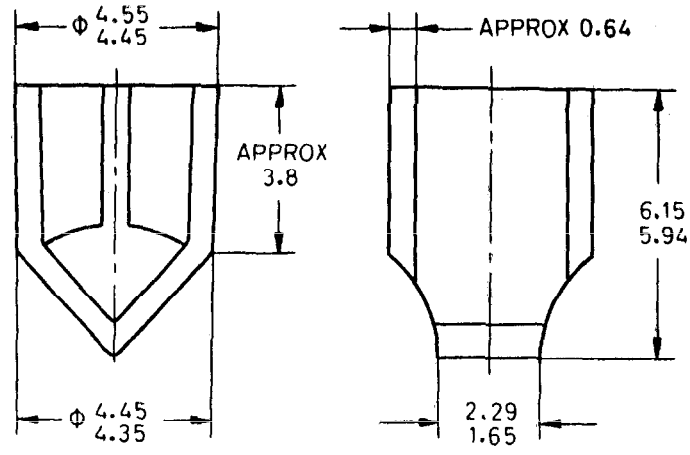

IA TUBULAR DESIGN

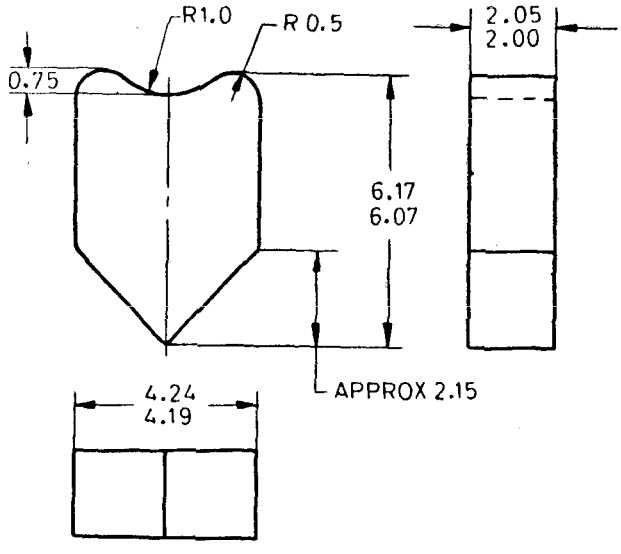

IB FLAT ANVIL DESIGN

Note 1 — All sharp corners to be joined with curves.
Note 2 — Anvils to pass through ring gauges of 4·547 diameter.
Note 3 — Hardness of finished anvil to be not less than 140 VPN.

All dimensions in millimetres.

Fig. 1 DIMENSIONS FOR ANVIL

3. Material — The anvil shall be made from brass strips conforming to IS : 410-1977 'Cold rolled brass sheet, strip and foil (*third revision*)' and shall be hardened to 140 *HV*.

Adopted 21 June 1985 © December 1985, ISI Gr 1

INDIAN STANDARDS INSTITUTION
MANAK BHAVAN, 9 BAHADUR SHAH ZAFAR MARG
NEW DELHI 110002

Arms and Ammunition for Civilian Use Sectional Committee, EDC 87 [Ref : Doc : EDC 87 (4042)]

4. Other Requirements — The requirements not covered in this standard shall be as given in IS : 10994 (Part 1)-1984 'Specification for cartridges for shot guns : Part 1 General requirements'.

EXPLANATORY NOTE

Anvil acts as initiator for firing the cartridge.

This Indian Standard (IS : 10994) is being issued in the following parts, Part 1 covering general requirements for shot gun cartridges and subsequent parts covering the individual components.

Part 1 General requirements

Part 2 Blank cartridges

Part 3 Case empty

Part 4 Cap filled

Part 5 Anvil

Part 6 Propellent

Part 7 Discs

Part 8 Air cushion

Part 9 Lead shots

This standard has been prepared based on the data received from Ammunition Factory, Khadki, Pune.

Printed at Arcee Press. New Delhi, India